NETWORK TECHNOLOGIES INCORPORATED
1275 Danner Dr Aurora, OH 44202
Tel:330-562-7070 Fax:330-562-1999
www.networktechinc.com

RACKMUX® Series

RACKMUX-UW15-4USB
RACKMUX-UW15-8USB
RACKMUX-UW17-4USB
RACKMUX-UW17-8USB

KVM Drawer with USB KVM Switch
Installation and Operation Manual

Warranty Information

The warranty period on this product (parts and labor) is two (2) years from the date of purchase. Please contact Network Technologies Inc at **(800) 742-8324** (800-RGB-TECH) or **(330) 562-7070** or visit our website at http://www.networktechinc.com for information regarding repairs and/or returns. A return authorization number is required for all repairs/returns.

COPYRIGHT

Copyright © 2003-2007 by Network Technologies Inc. All rights reserved. No part of this publication may be reproduced, stored in a retrieval system, or transmitted, in any form or by any means, electronic, mechanical, photocopying, recording, or otherwise, without the prior written consent of Network Technologies Inc, 1275 Danner Drive, Aurora, Ohio 44202.

CHANGES

The material in this guide is for information only and is subject to change without notice. Network Technologies Inc reserves the right to make changes in the product design without reservation and without notification to its users.

TRADEMARK

RACKMUX is a registered trademark of Network Technologies Inc in the U.S. and other countries.

TABLE OF CONTENTS

INTRODUCTION 1
Available Options 1
Types of CPUs Supported 1
Features 1
MATERIALS 2
FEATURES AND FUNCTIONS 3
INSTALLATION 4
Rack Mounting Instructions 4
Connect The Cables 4
Power-Up Sequence 5
USING THE RACKMUX 6
Keyboard Control 6
OSD Control 6
Security Option 6
Enabling the Security Feature 6
User Login Mode 7
ADDITIONAL MODES AVAILABLE WITH SECURITY 8
Administration Mode 8
Administrator Password 8
User Name List 9
Edit user 10
Alternate Command Hot Key 11
USER ACCESS FUNCTIONS 11
Introduction 11
Command Mode 11
Broadcast Mode 13
Scan Mode 13
Normal Mode 13
Edit Mode 13
Change Settings 14
Select Ports For Broadcast 15
Select Ports For Scan 15
Language Selection 16
MAC Ports Configuration 16
Search Mode 17
Maintenance Mode 17
Help Mode 18
F3- Display Information 19
No Sun Sleep Mode 19
CASCADING 20
Cascaded Installation 20
Limitations 22
MOUSE CLICK EQUIVALENTS 23
KEYBOARD FEATURES 23
Keyboard-To-Computer Translation 23
Translation Capabilities 23
Translation Tables 23
International Sun Keyboards 24
DDC SUPPORT 24
TROUBLESHOOTING 24
DEFAULT PASSWORD RESET 25

TABLE OF FIGURES

Figure 1- Mount RACKMUX to rack 4
Figure 2- Connect each CPU 5
Figure 3- Connect the power cord and AC adapter 5
Figure 4- Administrator Login screen 7
Figure 5- User Login screen 7
Figure 6- Administration Mode menu 8
Figure 7- Administrator password change 8
Figure 8- User Name List screen 9
Figure 9- Edit the user access list 10
Figure 10- Command Mode screen 11
Figure 11- More Command Mode Features 12
Figure 12- Edit Mode screen 13
Figure 13- Change Settings menu 14
Figure 14- Select ports for broadcasting 15
Figure 15- Select ports for scanning 15
Figure 16- Select the keyboard language 16
Figure 17- Configure Ports for MAC screen 16
Figure 18- Search Mode screen 17
Figure 19- Maintenance Mode screen 17
Figure 20- Information provided by the F3 command 19
Figure 21- Connections for Cascading 20
Figure 22- Cascaded configuration with multi-user slaves 21
Figure 23- Master-to-slave device cable connections- single-user switches 21
Figure 24- Master to slave cable connections- multi-user switches 22
Figure 25- Locating the password reset button 25

INTRODUCTION

The RACKMUX-UW15-8USB (formerly referred to as RACKMUX-15-USBV-8) is a KVM Drawer with USB KVM Switch (***RACKMUX***) that combines a rackmount 15" TFT/ LCD monitor, keyboard, trackball mouse, and USB KVM switch (***UNIMUX***) in a space-saving 1RU industrial strength drawer. The RACKMUX is equipped with a built-in switch function, which allows control of up to eight USB-enabled computers with a single keyboard, mouse and monitor.

The onboard USB KVM swtich allows access to any Windows, MAC, or SUN USB CPUs from one monitor, USB keyboard and USB mouse (up to 8 CPUs). Internal microprocessor circuitry allows all USB CPUs to be booted simultaneously without keyboard error. Port selection is accomplished through On Screen Display (OSD) menus provided for switch control and security administration.

Models Available

- RACKMUX-UW15-4USB - KVM Drawer with 15" TFT/LCD monitor and 4-port UNIMUX
- RACKMUX-UW17-4USB - KVM Drawer with 17" TFT/LCD monitor and 4-port UNIMUX
- RACKMUX-UW15-8USB - KVM Drawer with 15" TFT/LCD monitor and 8-port UNIMUX
- RACKMUX-UW17-8USB - KVM Drawer with 17" TFT/LCD monitor and 8-port UNIMUX

Available Option

- The integrated USB KVM switch (***UNIMUX***) is available with DDC support by adding "D" to model number (RACKMUX-UW15/17-xUSB-**D**)

Types of CPUs Supported

Any USB CPU supporting USB version 1.0 or above including:

- USB WINxx
- USB MAC
- USB SUN

Features

- Entire unit is only 1RU (1.75") high.
- High-quality metal construction (ideal for most industrial and commercial settings)
- 15" or 17" Rack Mount LCD Monitor features a wide viewing angle
- 1024X768 resolution for 15" XGA monitor
- 1280x1024 resolution for 17" SXGA monitor
- LCD Power-up when raised; manual override.
- LCD Display controls (using on-screen menu).
- NEMA sealed front 2mm glass protects the LCD panel
- "Gold Crosspoint" keyboard contacts for high reliability
- Includes rack mount kit suitable for SUN and most EIA 19" racks
- Fits varying rack depths via adjustable mounting brackets (see chart on page 25)
- VGA/SVGA/XGA/ SXGA Compatible
- KVM Drawer powered by 110-240VAC, 50 or 60Hz via AC adapter w/ IEC connector and country-specific line cord
- Integrated USB KVM Switch powered by 110-24VAC, 50 or 60Hz via IEC connector and country-specific line cord

MATERIALS

Materials supplied with this kit:

- NTI RACKMUX-UW15/17-4/8 KVM Drawer with USB KVM Switch
- 2-Line cords, country specific
- 110-240VAC, 50 or 60Hz-12VDC/4A AC Adapter
- set of keys for keylock
- This manual

Materials *Not* supplied but *REQUIRED:*

A USBVEXT-xx-MM cable for each USB CPU being connected to the switch must be used for monitor, keyboard and mouse interface.

where:

xx is the length of the cable in feet
MM indicates male-to-male connector

Cables can be purchased from Network Technologies Inc by calling ***(800) 742-8324*** *(800-RGB-TECH) in the US and Canada or* ***(330) 562-7070*** *(worldwide).*

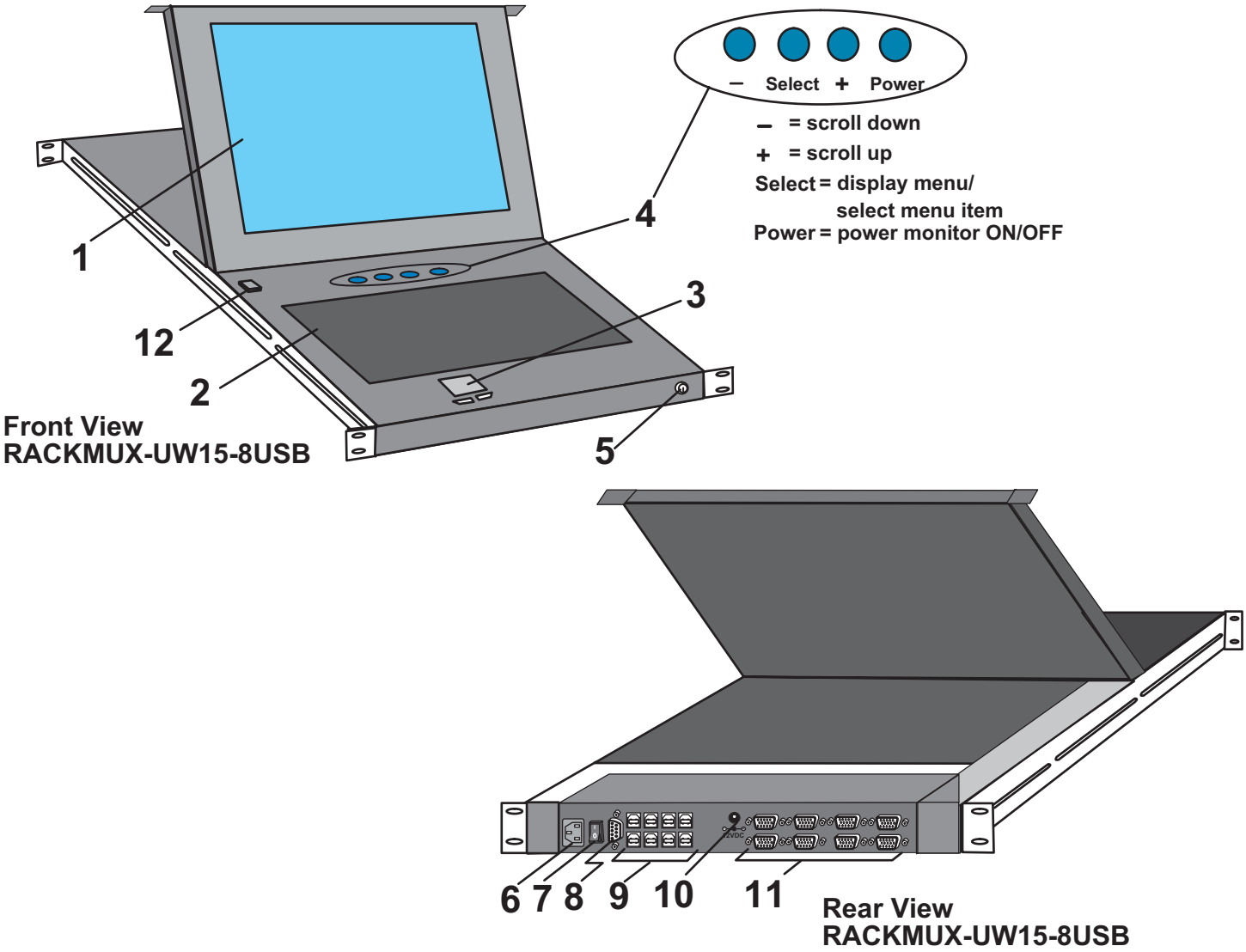

FEATURES AND FUNCTIONS

1. LCD Display Monitor- for user video interface
2. Keyboard with Trackball- for user data input
3. Mousepad - for user control
4. Buttons- to control display characteristics
5. Keylock- to secure the drawer and prevent unauthorized use
6. IEC Connector- for power cord connection to power the UNIMUX
7. Power Switch- to power up or power down the UNIMUX
8. RS232- 9D male connector- for attaching RS232 interface cable from a CPU to control the functions of one or more switches
9. CPU x- USB type B female connector-for connection of USB device cable from CPU(s)
10. 12VDC- for connection of a 12VDC AC Adapter to power the KVM Drawer
11. VIDEO x- 15HD female connectors- for connecting video cables from CPUs
12. Auto-power-ON/OFF button- to automatically power ON or OFF the monitor when it is raised or lowered

INSTALLATION

Rack Mounting Instructions

The RACKMUX was designed to be mounted to a rack and includes mounting flanges to make attachment easy.

1. Determine the mounting height in the rack for the drawer. It should be a height comfortable to use the keyboard and see the LCD display. Mark holes in each of the 4 corner cabinet rails at points all level with each other.

2. Secure the rear brackets to the rear rack cabinet rails. Apply the top screws (not supplied) for each bracket to the holes marked in step 1.

3. Lift the keyboard into position and line the studs on the left and right sides up with the slotted openings in the rear bracket. Apply the nuts (supplied) to the studs but do not tighten the nuts yet.

FYI: There are 3 mounting studs provided on each side of the RACKMUX. Depending on the depth of the rack and distance apart of the cabinet rails, the position of the rear bracket may make all 3 studs available for use. In this case, apply the 2 nuts to the studs furthest apart from each other on each side.

4. Slide the drawer in until the top holes in the front bracket flanges line up with the holes marked in step 1. Secure the front brackets on the drawer to the front cabinet rails. Be sure to tighten the screws securely. Then tighten the nuts applied in step 3.

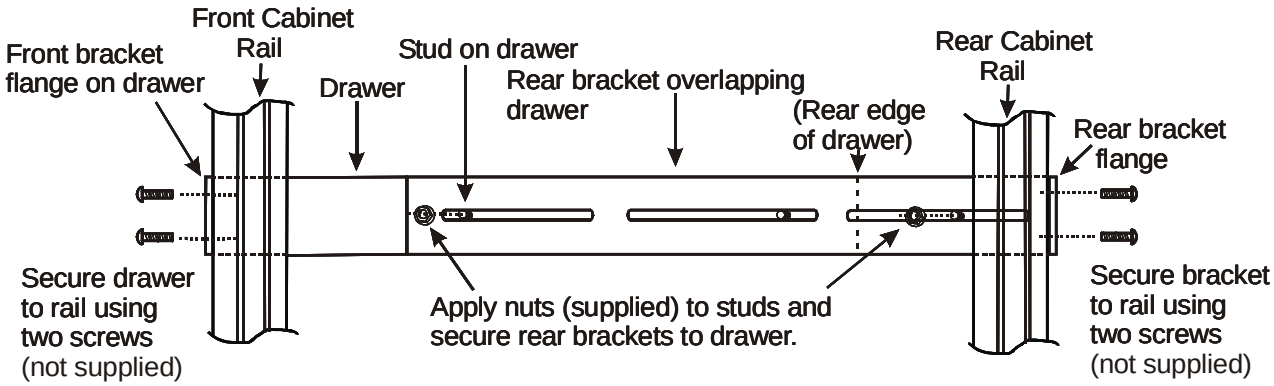

Figure 1- Mount RACKMUX to rack

Connect The Cables

FYI It is not necessary to turn the CPUs or monitors OFF during this installation.

1. Connect each CPU to the UNIMUX switch using a USBVEXT-*xx*-MM video and input device interface cable – REQUIRED (not supplied). (See Fig. 2 on page 5.)
2. Group the input device and monitor interface cables from each CPU, making sure that cables from the first CPU are connected to the UNIMUX switch at connectors "CPU 1" and "VIDEO 1". Cables from the second CPU should connect to "CPU 2" and "VIDEO 2" connectors...etc.

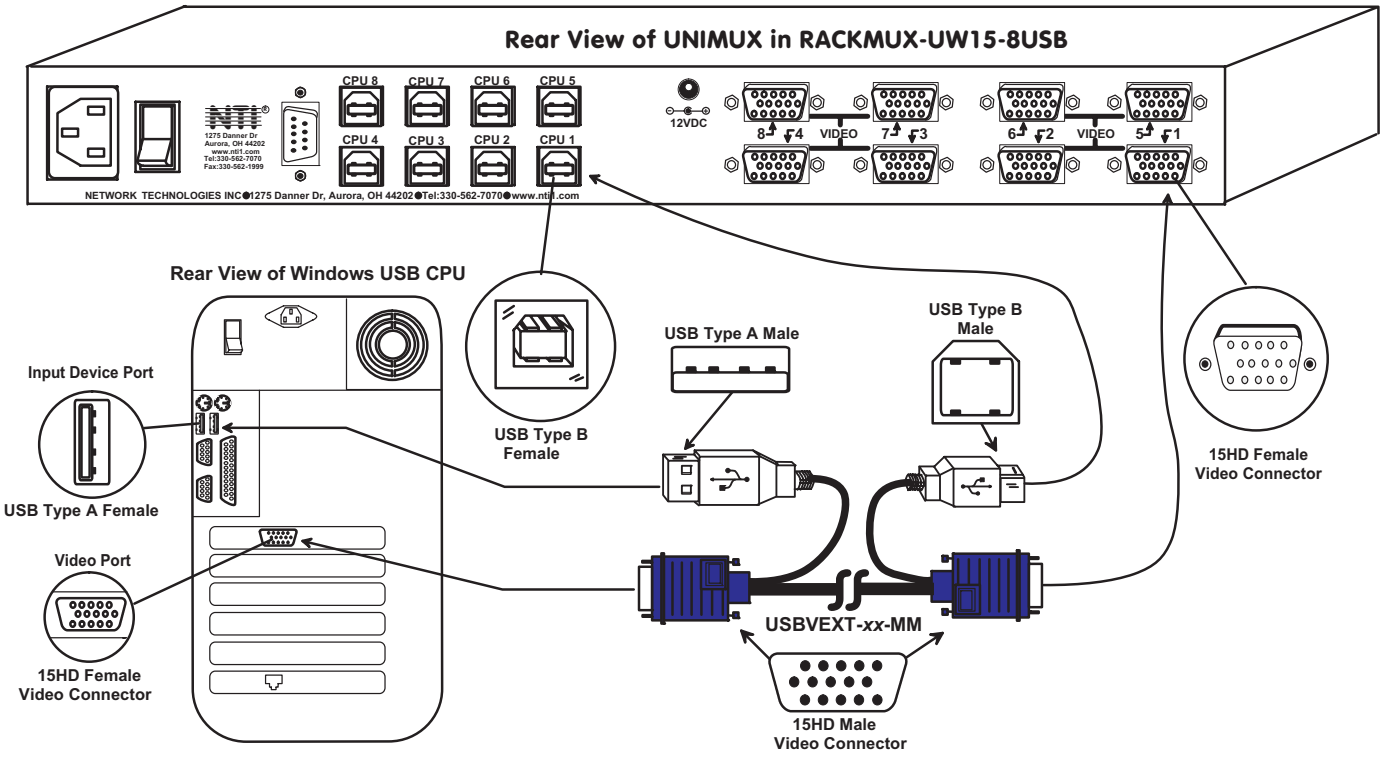

Figure 2- Connect each CPU

3. Connect the power cord to the IEC connector and the AC adapter to the "12VDC" connector.

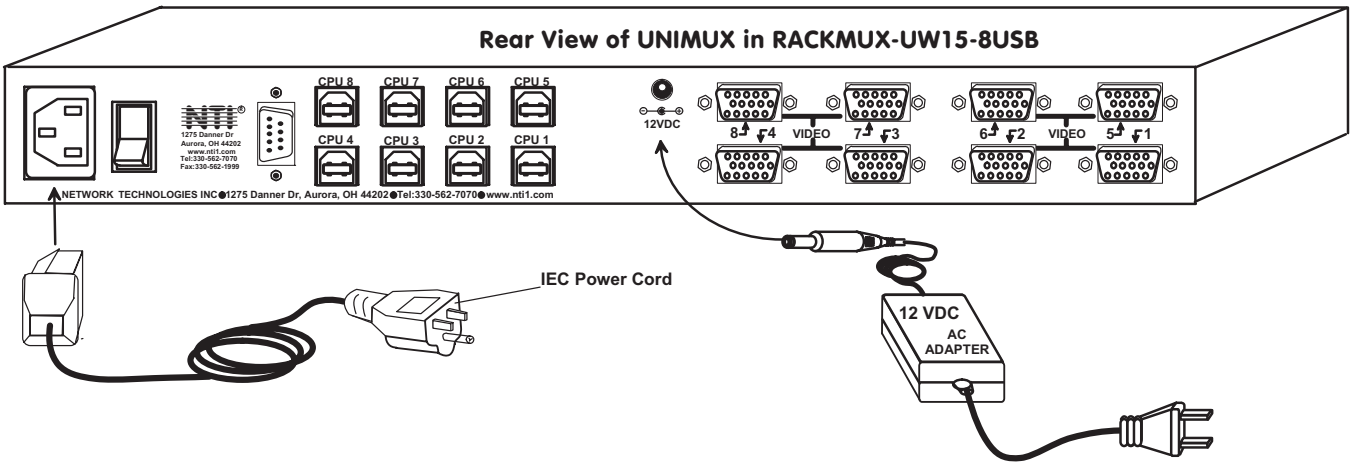

Figure 3- Connect the power cord and AC adapter

Power-Up Sequence

1. Using the key, unlock the drawer and slide the keyboard and LCD Display out far enough to raise the display to a comfortable viewing angle.
2. Power ON the KVM Drawer with the power switch located at the rear of the keyboard.
3. Adjust the screen's brightness and contrast with the controls also located at the rear of the keyboard– as needed.
4. Power ON the UNIMUX with the power switch at the rear of the unit.
5. Power ON any attached CPUs.

FYI: The CPUs can be powered at any time although if a CPU needs a keyboard and/or mouse at power-ON it should be powered after connecting to and powering-ON the UNIMUX switch.

Note: If the DDC support option is installed, the UNIMUX and the monitor must be powered up before any CPUs are powered up.

USING THE RACKMUX

Once the RACKMUX is properly connected, the UNIMUX switch will enable a connection to be made between the attached CPUs and the monitor, keyboard, and mouse.

The UNIMUX switch can be controlled by two methods:

- keyboard control through Command Mode
- mouse clicks from within some menus of Command Mode

Keyboard Control

Keyboard control of the UNIMUX switch is achieved using Command Mode - operated using the keyboard and mouse in conjunction with OSD menus superimposed onto the monitor.

By pressing <Ctrl> + < ` > (accent key), the user can enter Command Mode. Once in Command Mode, typing a series of commands will cause the UNIMUX switch to connect the user to any one CPU connected to the switch. Pressing the <Esc> key will exit Command Mode. The following instruction describes how to use the menus to operate the UNIMUX switch.

OSD CONTROL

OSD superimposes a menu system on the user's video screen with a list of all connected CPUs. OSD allows CPUs to be named (with up to 12-character names). OSD then allows selection of CPUs by that name. Connected CPUs can be listed by name or by port number. OSD Search Mode enables the user to type in the first few characters of the CPU's name and the OSD will locate it. Help screens assist with all OSD functions.

Security Option

The security option of the OSD Control enables an administrator to control access to CPU ports for each user. Up to 63 users can be created. These users have controlled access to any CPU. Only the administrator can activate or deactivate the security features. Security can be activated from the Maintenance Mode menu (page 17) with a successful administrator login for verification purposes. Furthermore, the administrator can set a maximum idle time value after which the current user will be logged out and the login screen displayed. This time out does not function while the OSD is active. The current security status, idle time out, and scan dwell time are all saved and will be restored whenever power to the switch is cycled OFF, then ON.

If the security option is enabled, when the RACKMUX is powered up the user will be prompted for a username and password to continue. If the security option is not enabled the monitor will display the desktop image for the connected CPU and the user can continue with normal operation of the connected CPU.

Enabling the Security Feature

To enable the security feature the administrator must first enter Command Mode from the keyboard using the sequence <Ctrl> + <`> (accent key). The OSD menu will automatically appear on the monitor. This provides a visual way to control the UNIMUX switch using the keyboard and mouse.

The administrator , when setting the UNIMUX switch up for the first time, may want to proceed directly to the ADMINISTRATION Mode by typing <CTRL> +<M> , then <A>, and then <Y>.

The factory settings are:

- **user name = ADMINISTRATOR**
- **password = ADMINISTRATOR**

Note: The user name for the administrator cannot be changed from "ADMINISTRATOR".

Once logged-in, follow the instructions on pages 8 and 9 for setting up users and changing the password. Within the Administration Mode the administrator can setup each of the users and the limitations of their use of the individual CPUs attached to the switch.

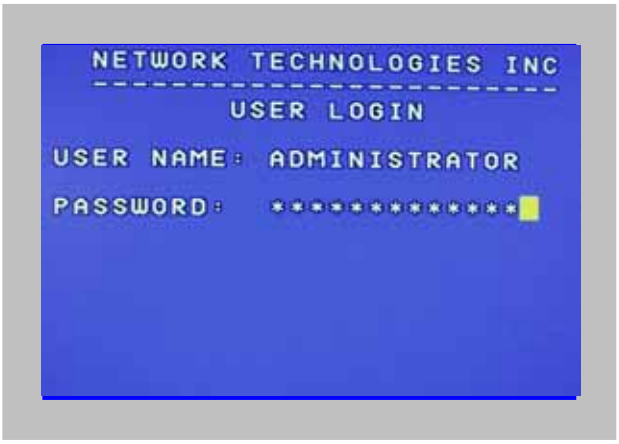

Figure 4- Administrator Login screen

When a standard user powers up the system a security screen will appear if security has been enabled by the administrator. The user will need to login to the switch by following the instructions below for the USER LOGIN. If the user does not know the appropriate user name and password (setup by the administrator), contact the switch administrator for this information. Once logged-in a user can follow the Command Mode functions described on page 10 to control the switch within the limitations as determined by the administrator.

User Login Mode

User login mode requires a user to login with a user name and password from the list created by the administrator. This mode will also disable use of the front panel until the user logs in.

Function:	Keystroke:
Adds a character to the user name/password	A-Z 0-9 **(Type any alphabetical or numeric character)**
Removes previous character from the user name/password	Backspace
Submit user name/password	Enter
Exit USER LOGIN and return to previous mode. This function is only available if security is not currently active.	Esc

If the password submitted is incorrect, the user will not be able to proceed.

If the password submitted is correct, the user will proceed to Normal Mode.

Figure 5- User Login screen

ADDITIONAL MODES AVAILABLE WITH SECURITY

The three modes that follow are only available if the administrator is logged in.

Administration Mode

To enter the Administration Mode menu press <A> from the Maintenance Mode menu (page 17).

Administration Mode allows the administrator to use the following functions:

Function:	Keystroke:
Change the administrator's password	C
Disable security	S
Update User Name List	U
Change Alternate Command Hot Key	X
Selects the idle time in minutes	T - (0-2) x - (0-9) x - (0-9) x (xxx from 000 to 255. i.e. T002 would set the time-out period for 2 minutes. 000 will disable it)
Exit Administration Mode and return to previous mode	Esc

Figure 6- Administration Mode menu

Administrator Password

To change the administrator password press <C> from the Administration Mode menu.

The administrator is able to change the administrator password as needed (see Fig. 7). Two edit fields are available, one for password, the other for verify password. The password can be up to 13 characters in length.

Note: The default password for the administrator is ADMINISTRATOR.

Figure 7- Administrator password change

Function:	Keystroke:
Add character to password string or verify password string	A-Z 0-9 **or** Shift + A-Z **(Type any upper or lower case alphabetical or numeric character)**
Delete previous character in edited string	Backspace
Save new password.	Enter **(If Password string and Verify Password string are different, this command will have no effect, enabling the administrator to correct the password)**
Move to next field to be edited	Tab
Return to Administration Mode	Esc

User Name List

To enter the User Name List press <U> from the Administration Mode menu.

The User Name List displays the list of users and provides control for adding new users (up to 63), changing or assigning user passwords, and changing access rights for any given user. User names may be up to 12 characters long, may not contain spaces, and are not case sensitive. Passwords may be up to 15 characters long, may not contain spaces, and are case sensitive.

Function:	Keystroke:
Select previous user in the list	↑
Select next user in the list	↓
Scroll the list with one page up	Page Up
Scroll the list with one page down	Page Down
Edit selected user settings- Enter Edit User Mode	E
Exit the USER NAME LIST and return to previous mode	Esc

Figure 8- User Name List screen

Edit user

To enter the Edit User mode press <E> from the User Name List after selecting a user or an empty record.

The Edit User mode (see Fig. 9) enables the administrator to:

- add a new user
- remove an existing user
- edit the settings for an existing user

The Edit User mode contains three edit boxes and a check box list of up to 32 check boxes representing the User Access List (list of the CPU port(s) the user has access rights to).

The first edit box is used to edit the user name. The next two edit boxes are used to input the password twice (in order to verify it was typed correctly). The password can be up to 13 characters in length.

The check boxes are used to control the user access to the CPU ports. The user will only have access to check boxes with checks in them.

Figure 9- Edit the user access list

The list below describes the functions available in the Edit User mode:

Function:	**Keystroke:**
Add a character to user name string, password string, or verify password string, whichever is selected	A-Z 0-9 **or** Shift **+** A-Z **(Type any upper or lower case alphabetical or numeric character)**
Switch sequentially between the User Name edit box, Password edit box, Verify Password edit box, and User Access List	Tab
Navigate through User Access List when it is active	← **or** →
Toggle access rights (check/ uncheck) of the highlighted port in the User Access List	(Spacebar)
Save the edited configuration. Administrator will be prompted for a Yes or No confirmation	Enter **(If Password string and Verify Password string are different, this command will have no effect, enabling the administrator to correct the password)**
Go back to User Name List menu	Esc

NOTE: To delete a user from the User Name List, use either the <Delete> key or the <Backspace> key to remove characters, not the <Spacebar>. Using the <Spacebar> will overwrite the characters with spaces and retain the user configuration in the User Name List. .

Alternate Command Hot Key

To enable the administrator to assign a key in addition to the <`> (accent key) to use with <Ctrl> to enter into OSD Command Mode, an Alternate Command Hot Key option is provided. The default factory setting for this option is <`> (disabling the option).

To select an Alternate Command Hot Key, press <X> from Administration Mode menu (page 8). A window will open and the administrator will be prompted to press a key. After pressing the key, a confirmation message will appear. The administrator should press <Y> (Yes) to validate the key as the Alternate Command Hot Key, or <N> (No) to select another key. Pressing <Esc> will return to the Administration Mode menu.

Only the administrator is allowed to set or change the Alternate Command Hot Key. This function must be set individually for each of the USB User Device ports on the UNIMUX.

FYI: The Alternate Command Hot Key does not replace the <`> (accent) key, it just works as another way to enter into Command Mode. After setting it, the user can enter into Command Mode either with <Ctrl> + <`> or with <Ctrl> + <Alternative Command Hot Key> combination. To disable it, the administrator should set <`> as the Alternate Command Hot Key.

USER ACCESS FUNCTIONS

Introduction

The OSD menu enables a user to name the CPUs connected to the UNIMUX switch and connect to them using that name. The OSD is positioned on the monitor, displaying 8 CPU names at a time. The screen can be used for switching as well as editing the CPUs' names. Through the OSD menu, the user can operate the UNIMUX switch to have the switch cycle through 3 extended modes of operation: COMMAND, BROADCAST, and SCAN .

Command Mode

When entering the Command Mode from the keyboard using the <Ctrl> + <`> (accent key), the OSD menu will automatically appear on the monitor. This provides a visual way to control the UNIMUX switch.

The list below describes the OSD Command functions available from the keyboard after entering Command Mode:

Function:	**Keystroke:**
Select the previous port	↑
Select the next port	↓
Enable/disable Scan Mode	Ctrl + S
Enable/disable Broadcast Mode	Ctrl + B
Enter Edit Mode	Ctrl + E
Enter Maintenance Mode	Ctrl + M
Enter Change Settings Menu	Ctrl + T

Figure 10- Command Mode screen

Command Mode (Cont'd)

Function:	Keystroke:
Selects a specific port	Ctrl + P - (0-9) x - (0-9) x (Pxx would be P01, P02, etc.)
Enters Search Mode and adds a character to search string and selects the CPU's name that matches best.	A-Z 0-9 (Type any alphabetical or numeric character)
Selects the first port on the switch	Home
Selects the last port on the switch	End
Display Help Menu	F1
Switch to a selected port	Enter
Update Configuration	Ctrl + Tab (Use this command to update the information describing the structure of the cascaded switches. Used if a slave is powered-ON or OFF at any time after initial startup.)
Display port information	F3 (Display information about the selected port. When pressed, a window displays the port name and its position in the configuration structure by level and port number.)
Exit OSD Command Mode	Esc

Press <CTRL> while in the Command Mode menu to display the Edit, Maintenance, Port, and Settings control features.

Note: The user must exit Command Mode to type to a CPU.

To exit Command Mode, either hold down any touch-switch on the front panel for more than 2 seconds, OR press <ESC> on the keyboard.

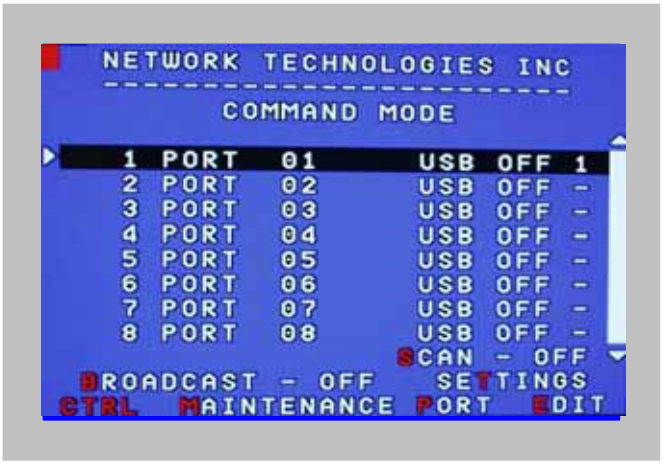

Figure 11- More Command Mode Features

The mouse can also be used to control the UNIMUX switch within the Command Mode menu.

- The mouse cursor can be moved to the Scan, Help, Broadcast, Settings, Maintenance and Exit fields where the user can then click on the left mouse button to perform that function.
- Ports listed on the screen can be selected by moving the cursor onto that port and clicking. Clicking twice on a selected port will switch to that port and exit Command Mode.
- To change the displayed ports on the screen simply click on the up and down arrows located to the right of the port names displayed.

Broadcast Mode

To activate Broadcast Mode press <Ctrl> + <B> from the Command Mode menu.

Broadcast Mode enables the user to type characters to more computers simultaneously. From the Change Settings menu (see page 13) the user can edit the list of ports that receive data in Broadcast Mode. A port doesn't receive broadcast data if one of the following conditions is true:

- the port is not in the Broadcast Mode list
- Security Mode is enabled and the user does not have access rights to the port

NOTE: The user must type somewhat slowly when in Broadcast Mode (less than 20 wpm) and cannot use the <Backspace> key.

Scan Mode

To activate Scan Mode press <Ctrl> + <S> from the Command Mode menu.

When in Scan Mode the switch scans to each port with a CPU powered-ON. The port with the CPU powered-ON remains active while in use until it becomes idle for the configured dwell time (default time-out period is 5 seconds) before switching to the next powered-ON CPU port. See Command Mode section above for configuring the scan dwell time.

Note: The keyboard and mouse must remain idle for the full scan dwell time before the switch selects the next active port.

Note: The scan dwell time set by the user only effects that user and has no effect on other switch users.

Normal Mode

When the UNIMUX switch is not in Command or Scan mode, the user is in Normal Mode, controlling the CPU to which the user is connected through the UNIMUX switch.

Edit Mode

NOTE: Edit Mode will only be accessible if the administrator is logged in.

To activate Edit Mode press <Ctrl> + <E> from the Command Mode menu.

Edit Mode enables the user to modify the names of the CPUs connected to the switch. Names of CPUs can be up to 12 characters in length. When in Edit Mode, multiple keystroke combinations are not valid (<Shift>+P, <Ctrl>+P, <Alt>+ P, and P will all type a "P" to the display - lower case letters cannot be typed).

Function:	**Keystroke:**
Move cursor one position to the right	
Move cursor one position to the left	
Move cursor to the previous port	
Move cursor to the next port	
Selects the first port on the switch	
Selects the last port on the switch	
Toggles between insert and overstrike	**(The character either gets inserted and the remainder of the name gets shifted to the right, OR the current character gets overwritten.)**

Figure 12- Edit Mode screen

Edit Mode (Con'td)

Function:	Keystroke:
Erase current character	Delete
Erase previous character	Backspace

When finished making changes in Edit Mode, press <Enter> and a prompt will appear to press either <Y> to save the changes or <N> to continue making changes without saving the changes just made. If the <Esc> key is pressed instead of <Enter>, all changes made will be ignored and the display will return to the previous menu.

Change Settings

To enter the Change Settings menu (see Fig. 13) press <Ctrl>+<T> from the Command Mode menu.

The list below describes the Change Settings menu functions available from the keyboard:

Function:	Keystroke:
Go to Broadcast Mode Configuration	B
Go to Scan Mode Configuration	S
Go to Language Selection Menu (Option only available if the administrator is logged in)	L
Change the scan dwell time period	T
Configure ports for MAC or non-MAC CPUs (Administrator only)	M
Enable/Disable right mouse button click emulation	R
Exit from Change Settings Return to Command Mode	Esc

Figure 13- Change Settings menu

When the <T> is pressed, an edit field showing the actual value of the scan dwell time is displayed at the bottom of the Change Settings menu. The user can introduce a new value for scan dwell time and press <Enter> to save it or <Esc> to exit. Any value between 002 and 255 (seconds) is acceptable.

Select Ports For Broadcast

To Select Ports For Broadcasting, press <B> from the Change Settings menu (see Fig. 13).

The Select Ports For Broadcast menu (see Fig. 14) enables the user to select specific ports to be active in Broadcast Mode. Only the selected ports will receive keyboard messages in Broadcast Mode.

A check list with all the port numbers will be displayed in the window.

- unchecked box = the corresponding port is **not** in the broadcast list
- checked box = the corresponding port **is** in the broadcast list

The user can toggle the state of the selected check box by pressing <Spacebar> or clicking the left mouse button.

- press <S> to check all of the ports
- press <C> to uncheck all of the ports

The selected port is highlighted with a green bar. To select another port, the user can use the arrow keys or mouse movement. The name of the selected port is displayed at the bottom left of the menu.

When <Esc> is pressed the display will return to the Change Settings menu. The broadcast selection list is automatically saved.

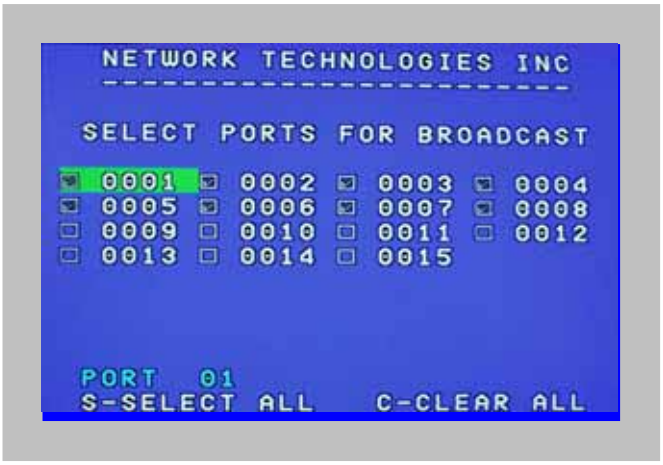

Figure 14- Select ports for broadcasting

Select Ports For Scan

To Select Ports For Scanning, press <S> from the Change Settings menu described on page 14.

The Select Ports For Scan menu enables the user to select specific ports to be active in Scan Mode. Only the selected ports will be scanned in Scan Mode.

A check list with all the port numbers preceded by a check-box will be displayed in the window.

- unchecked box = the corresponding port is **not** in the scan list
- checked box = the corresponding port **is** in the scan list

The user can toggle the state of the selected check box by pressing <Spacebar> or clicking the left mouse button.

- press <S> to check all of the ports
- press <C> to uncheck all of the ports

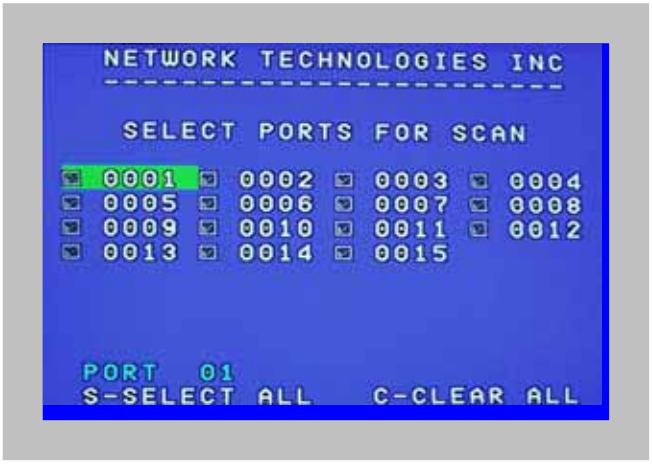

Figure 15- Select ports for scanning

The selected port is highlighted with a green bar. To select another port, the user can use the arrow keys or mouse movement. The name of the selected port is displayed at the bottom left of the menu.

When <Esc> is pressed the display will return to the Change Settings menu. The scan selection list is automatically saved.

Language Selection

NOTE: The LANGUAGE SELECTION option will only be accessible if the administrator is logged in.

To enter the Select Language menu press <L> from the Change Settings menu described on page 14.

The Language Selection menu enables the user to manually configure the UNIMUX to emulate a specific international Sun keyboard regardless of what actual keyboard is connected. This is recommended when the CPU needs the layout code (i.e. a SUN CPU) and the keyboard doesn't have an explicit layout code (i.e. Windows keyboards).

To choose a language, scroll through the menu (using either the mouse or up/down arrows) and when the desired language is highlighted press <Enter> on the main keyboard. The selected language will be highlighted in red. Press <Esc> to return to the Change Settings menu.

Figure 16- Select the keyboard language

For more on International Sun keyboards, see page 24.

MAC Ports Configuration

NOTE: The CONFIGURE MAC PORTS option will only be accessible if the administrator is logged in.

MAC Ports Configuration menu enables the administrator to select specific ports to be connected to MAC CPUs for passing mouse information to the MAC CPUs. This is useful when the user wants to use mouse drivers provided by the mouse vendor, which allows the use of programmable functions for each button. Ports should be configured at installation time or whenever necessary. After setting, the configuration is stored in non-volatile memory and will be retrieved whenever the switch is power ON. When the port is connected to a Windows or SUN CPU, this configuration SHOULD BE DISABLED. By default, all ports are configured as non-MAC CPUs (Windows and SUN).

NOTE: If a port is configured as connected to a non-MAC CPU, but is in fact connected to a MAC CPU, the mouse will still work as a generic mouse. No special functions provided by software drivers will be available.

To enter the MAC Ports Configuration menu, the administrator must press <M> from the Change Settings menu, described on page 14.

A check list with all the ports numbers preceded by a check-box will be displayed in the window.

- unchecked box = the corresponding port is set as connected to a non-MAC CPU
- checked box = the corresponding port is set as connected to a MAC CPU

In order to change the status of a port, the administrator has to first select the port. The selected port is highlighted with a green bar.

To select another port, the administrator can use the arrow keys or mouse movement. The name of the selected port is displayed at the bottom left of the menu, right above the yellow bar.

The administrator can toggle the state of the selected check box by pressing the <Spacebar> or clicking the left mouse button.

- Press <S> to check all the ports
- Press <C> to uncheck all the ports

Figure 17- Configure Ports for MAC screen

When <Esc> is pressed, the display will return to the Change Settings menu. The list is automatically saved.

The settings apply to all users of the switch.

Search Mode

To enter Search Mode, type any alphabetical or numeric character when the Command Mode menu is on the monitor.

Search Mode enables the user to enter and maneuver through a list of CPU names. The CPU name best matching the characters typed is selected. The list of CPUs may also be searched for a specific (or similar) name. The following commands are valid when the search option has been invoked from Command Mode.

Function:	**Keystroke:**
Erase previous character in search name	Backspace
Add a character to the search string and select the best matching CPU name	A-Z 0-9 **(Type any alphabetical or numeric character)**
Exit Search Mode, return to Command Mode	Esc
Switch to selected port	Enter

Figure 18- Search Mode screen

Maintenance Mode

To enter Maintenance Mode press <Ctrl>+<M> from the Command Mode menu.

Maintenance Mode enables a user to customize the On Screen Display to their requirements.

Function:	**Keystroke:**
Reset all of the port names	R
Toggle between numeric and alphabetic listing of ports	L
Move On Screen Display (OSD) menu up on monitor	↑
Move OSD menu down on monitor	↓
Move OSD menu to the right	→

Figure 19- Maintenance Mode screen

Note: After pressing <R> to reset the port names, the switch must be power-cycled or the <Ctrl>+<Tab> keys must be pressed in order for the switch to update.

Maintenance Mode (Cont'd)

Function:	Keystroke:
Move OSD menu to the left	←
Make OSD menu taller	T
Make OSD menu shorter	S
Change user password. (Present only when a standard user is logged in.)	P
Log current user out and return to User Login Mode.	Q
Activate security features. Present only when security is available but not active. Enter Administration Mode. Option present only when Administrator is logged in.	A
Save OSD window parameters for the port	Enter
Return to Command Mode	Esc

Note: If activating security features, the user will be prompted for a "Y" (yes) or "N" (no) to confirm the menu choice, at which point the user will be asked for a username and password before continuing. Only the administrator can activate the security features.

Help Mode

To enter Help Mode press the <F1> key from the Command Mode menu (see page 11).

Help Mode displays a list of commands with a short explanation of their function. These lists are organized in pages for each mode (i.e. COMMAND, EDIT, and SEARCH). The following options enable the user to quickly obtain information on any command.

Function:	Keystroke:
View the previous page of help if available	Page Up
View the next page of help if available	Page Down
Exit HELP and return to previous mode	Esc

F3- Display Information

To display information about a selected port, pressing the <F3> key from within the Command Mode main menu will cause a window to open. The window will show the name of the port and its position in the system structure, level by level. This is most useful when cascading switches (for Cascading see page 20). An example of this structure might be

LEVEL 1 : PORT 5
LEVEL 2 : PORT 3

This means that the CPU connected through this port is actually connect through Port 5 of the master switch (Level 1), and through port 3 of the slave connected to port 4 (Level 2). See Fig. 20 below.

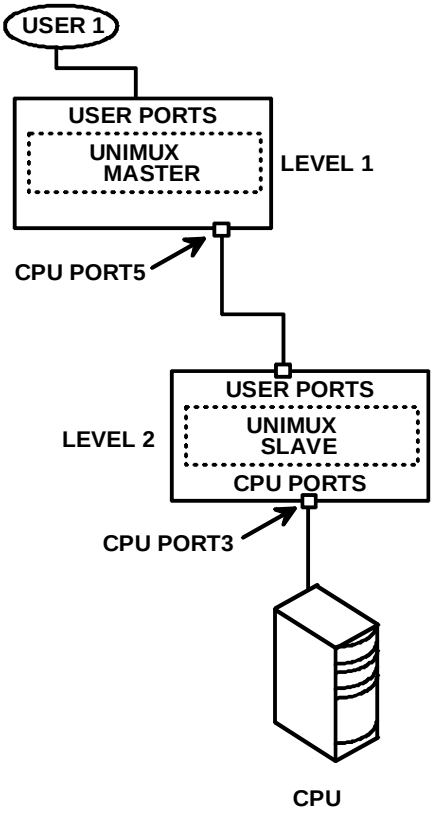

Figure 20- Information provided by the F3 command

No Sun Sleep Mode

PLEASE NOTE: It is necessary to configure a Sun CPU (most versions) such that the Sleep Mode is not enabled. If the Sun CPU goes into Sleep Mode either automatically or manually, the user must reboot the Sun CPU in order to resume use of the Sun CPU.

To disable the Sleep Mode, perform the following steps:

1. Select "Power Manager"
2. Look for "Device Idle Time Before Power Saving Starts"
3. Select "Always ON"
4. Look for "Override Device Idle Time For:"
5. Make sure neither "Monitors " nor "Disks" are selected.

CASCADING

The UNIMUX can be cascaded as shown in Fig. 21 below. Single user or multi-user UNIMUX switches may be connected downstream (see Figs. 23 and 24). The first switch in a cascaded system is referred to as the "master", while all downstream switches are referred to as "slaves". The only additional hardware required to cascade switches is a set of device and monitor cables for each “SLAVE UNIT” (USB-VEXT-xx-MM). All CPUs and switches can then be controlled by users using OSD commands with Command Mode.

Notes:

- ***The UNIMUX used in a RACKMUX cannot be connected in a cascaded system with UNIMUX-USBV-x switches made prior to 10-1-04.***

- ***Slaves in a cascaded system must be either all single-user switches or all multi-user switches, but not a combination of both.***

Cascaded Installation

a. Using the 15HD video cable ends of a USBVEXT-xx-MM cable, connect the USB KVM slave's MONITOR port to the master’s VIDEO 1 port.
b. Using the USB ends of the same USBVEXT-xx-MM cable, connect one of the USB slave’s USB DEVICES ports to the master’s CPU 1 port.

Note: Only one of the two ports labeled DEVICES on a slave needs to be used in order for cascading to work.

c. Repeat step b. & c. for each additional slave, keeping in mind that each slave will connect to the next available master’s port (i.e. Slave #2 to master’s VIDEO 2 & CPU 2, etc.) See Fig. 24 on page 22.

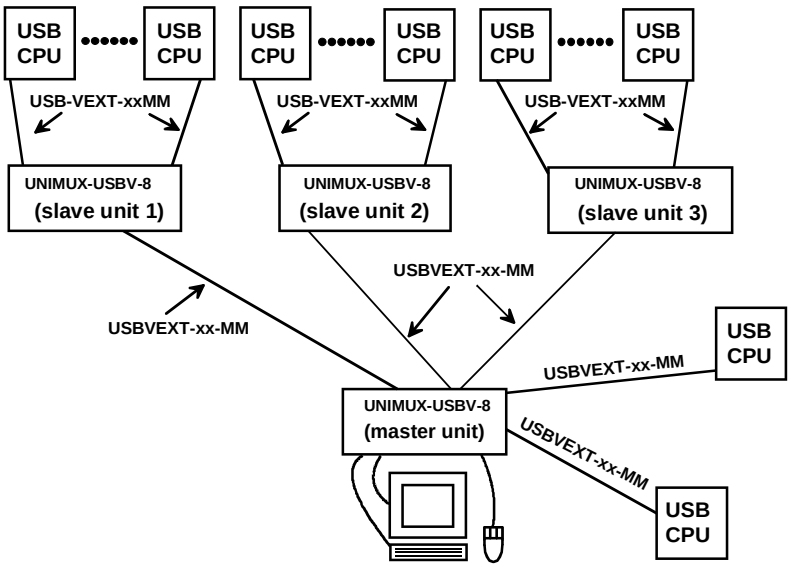

Figure 21- Connections for Cascading

.

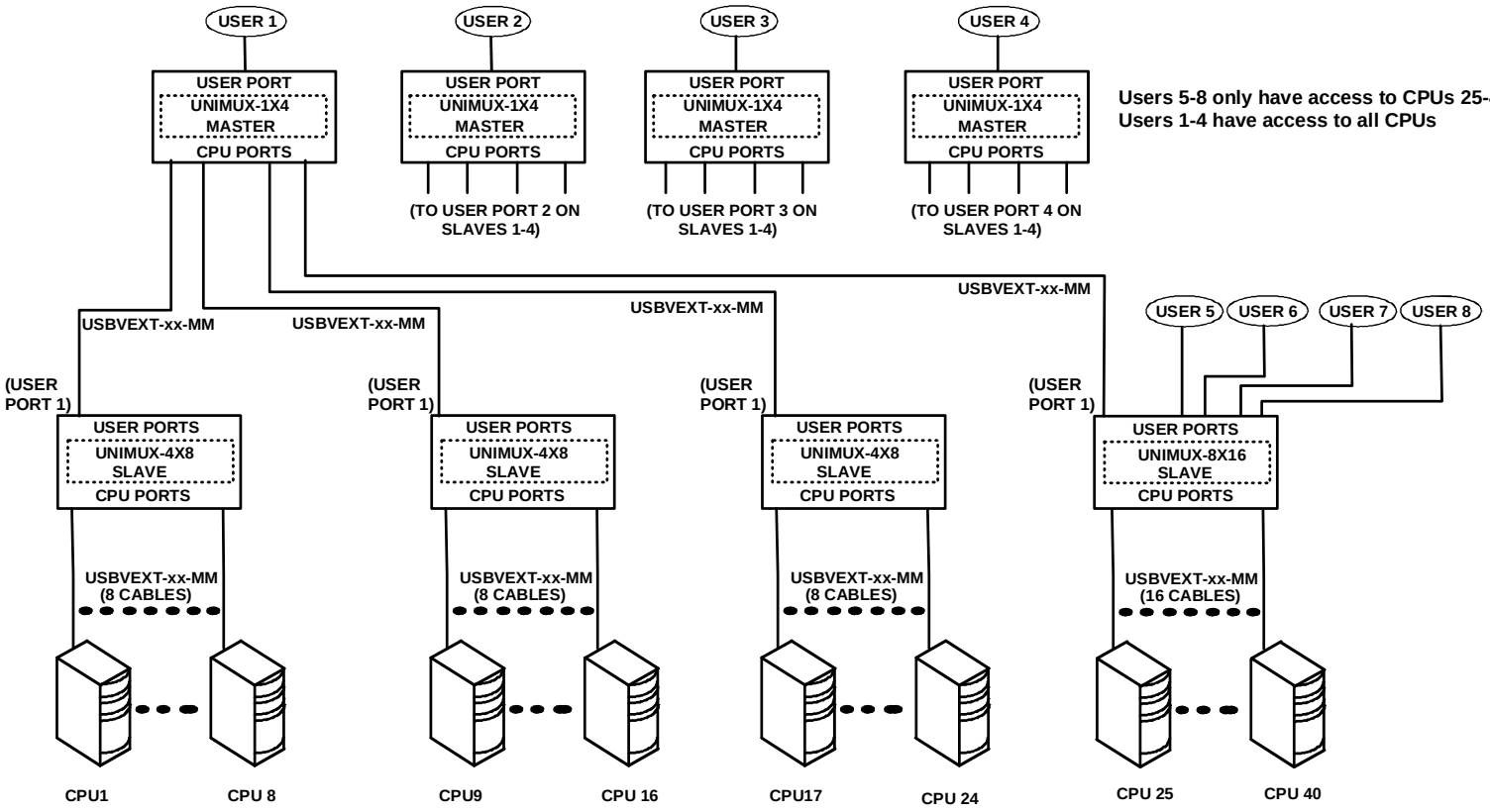

Figure 22- Cascaded configuration with multi-user slaves

FYI: Any USER and MONITOR ports on a multi-user switch connected as a slave that do not get connected to the master can be connected to by users (for example users 5-8 in Fig. 22). Users connected to a slave downstream from the master will control only the CPUs directly connected to that slave switch (i.e. users 5 and 6 in fig. 22 above can only control CPUs 25-40).

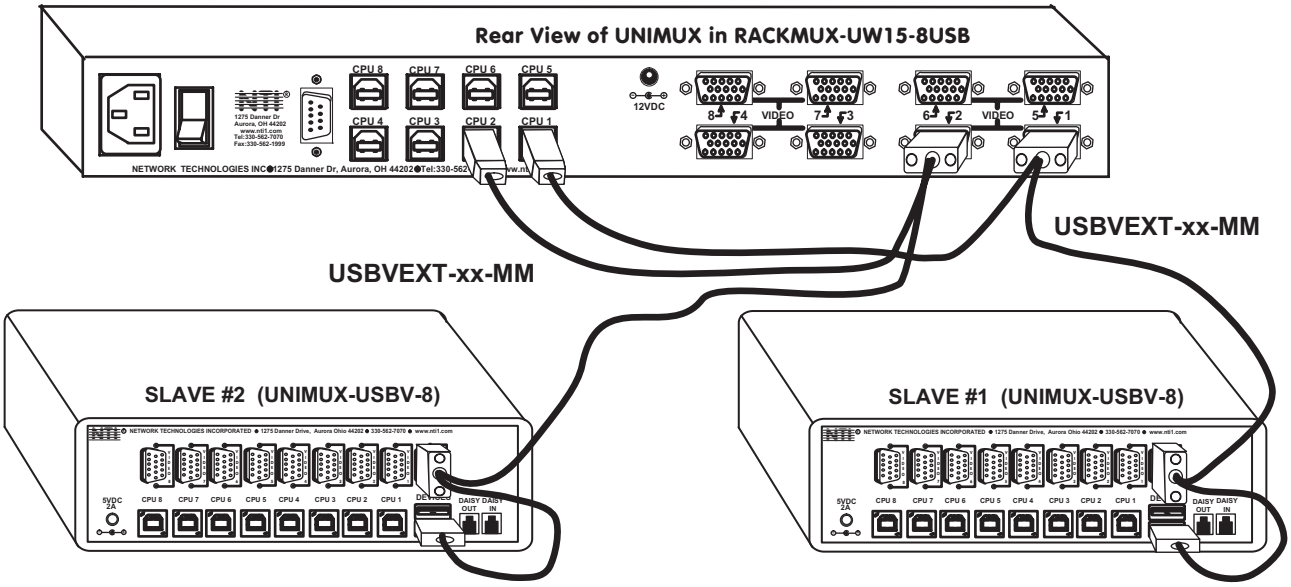

Figure 23- Master-to-slave device cable connections- single-user switches

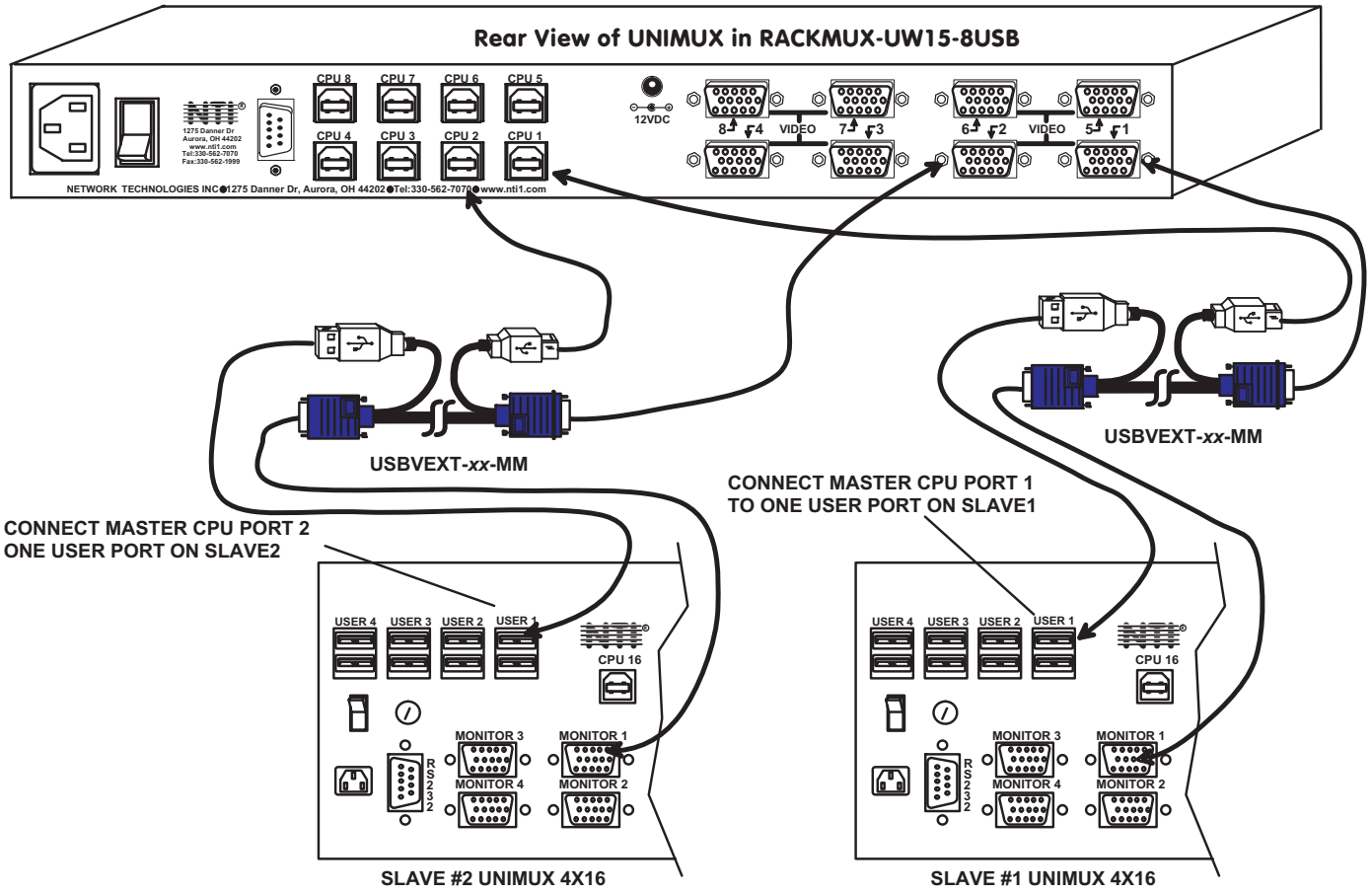

Figure 24- Master to slave cable connections- multi-user switches

Limitations

- All switches used as slaves must have the same number of CPU ports (all 4, 8, or 16 CPU ports).
- Up to 8 slaves may be connected to form a maximum system size of 152 ports (1x32 port master + 8x16 port slaves).
- Slaves must be added to the master in order (slave #1 to master's port 1, slave #2 to master's port 2, etc).

FYI: Master Port 1 (with an 8-port Slave connected to it) will become ports 1-8 (1-4 for a 4-port slave). Master Unit Port 2 (with a second 8-port Slave Unit connected) will become port numbers 9-16 (5-8 for a 4-port slave).

- The front panel buttons (found on most UNIMUX switches) are only used to operate standalone switches. To control a cascaded network of switches, only the OSD commands within Command Mode will be recognized.

MOUSE CLICK EQUIVALENTS

To emulate a right button click using Apple 1 button mouse, hold down the Command key ( ) while pressing the mouse button.

Note: Right mouse button emulation must be enabled (see Change Settings on page 14) for this to work.

KEYBOARD FEATURES

The keyboard configuration of each CPU is saved in the UNIMUX switch. For example, if the CPU attached to Port 2 had CAPS LOCK and NUM LOCK selected the last time that CPU was accessed, then they will automatically be set when that CPU is accessed again.

Keyboard-To-Computer Translation

The UNIMUX switch enables a mixture of otherwise incompatible peripheral computer components to be connected together. This is accomplished by performing keyboard-to-computer translations automatically (i.e. translate the Windows keyboard and mouse to a SUN type CPU). The chart below shows the capabilities of the keyboard controlling certain CPU types.

Translation Capabilities

	CPU		
Device	***Sun***	***Mac***	***Windows***
RACKMUX Keyboard	Extra keys emulation	Power key emulation	Full functionality

Translation Tables

Use the charts below to type SUN's additional keys with the RACKMUX keyboard:

SUN Extra Keys

RACKMUX keyboard	Sun Extra Keys
Space Bar + F1	Stop
Space Bar + F2	Again
Space Bar + F3	Props
Space Bar + F4	Undo
Space Bar + F5	Front
Space Bar + F6	Copy
Space Bar + F7	Open
Space Bar + F8	Paste
Space Bar + F9	Find
Space Bar + F10	Cut
Space Bar + F11	Help
Space Bar + F12	Compose
Space Bar + Up Arrow	Volume +
Space Bar + Down Arrow	Volume -
Space Bar + Left Arrow	Mute

Power Key Emulation

RACKMUX Keyboard	**Mac CPU**	**Sun CPU**
SB+RT Arrow	Power	Power

International Sun Keyboards

The UNIMUX can recognize international layouts for Sun keyboards. In order to use an international Sun keyboard, follow this procedure:

1. Power-OFF the CPU from the UNIMUX
2. Connect the international keyboard to be used to the UNIMUX
3. Power-ON the CPU to the UNIMUX

It is also possible to configure the UNIMUX to emulate a specific international Sun keyboard regardless of what actual keyboard is connected. This is recommended when the CPU needs the layout code (i.e. a SUN CPU) and the keyboard doesn't have an explicit layout code (i.e. some Windows keyboards). To do this, manually set the UNIMUX to indicate the international keyboard identification number to the CPU by following the instruction on page 16 for Language Selection.

DDC SUPPORT

(Optional)

DDC information allows the CPU to automatically select the optimal resolution for the monitor by receiving, at power up, information from the monitor concerning its resolution specifications.

When DDC Support is installed, the DDC information is acquired from the monitor by the UNIMUX switch when the UNIMUX is powered-up**.** The DDC information will be made available at every CPU port.

Note: In order for the CPU to correctly receive the DDC information from the switch at boot-up, the switch must be powered up before all attached CPUs.

TROUBLESHOOTING

PROBLEM: Keyboard Errors
SOLUTION: Check cable connections on each CPU and the switch.

PROBLEM: No Video
SOLUTION: Check cable connections on each CPU and the switch. Verify that keyboard and video connect from each CPU to matching ports. After reconnecting, CPU may need to be re-booted in order to sense the monitor connection.

DEFAULT PASSWORD RESET

In the event the Administrator password is lost or forgotten, the password can be reset to the default password of **ADMINISTRATOR**. Figure 25 shows the location of the password reset button.

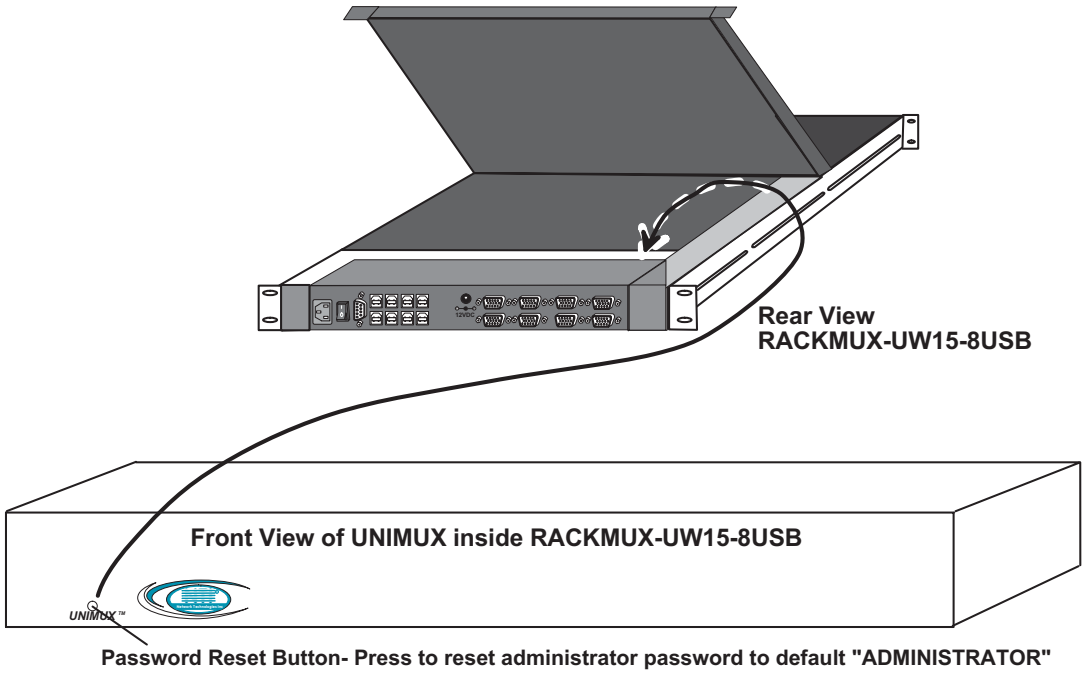

Figure 25- Locating the password reset button

Available RACKMUX KVM Switch Drawers

NTI Part #	Screen Size (In.)	# of CPUs	Size (In.) WxDxH	Rack Depth Range
RACKMUX-UW15-4USB	15	4	19x21.6x1.75	21.6"-31.5"
RACKMUX-UW15-8USB	15	8	19x21.6x1.75	21.6"-31.5"
RACKMUX-UW17-4USB	17	4	19x22.2x1.75	22.2"-33.5"
RACKMUX-UW17-8USB	17	8	19x22.2x1.75	22.2"-33.5"

MAN031 Rev 2/12/07